QONNECT
EUROPEAN RIVET ASSOCIATION

Item code: 03AS1



POS. ID		ITEM CODE	DESCRIPTION	Qty
1		04D06400132	Nose piece 3.2	1
1		04D06400140	Nose piece 4	1
1		04D06400150	Nose piece 5	1
2		04D06301412	Jaws	1
3		04D1100103	Clamping sleeve	1
4		04D1100200	Jaw pusher	1
5		04D1100300	Scraper ring	1
6		04D1100400	Nut	1
8		04S1100500	Conduit - suction complete	1
	801	04S1100520	Conduit - suction	1
	802	04N2103700710160	O - ring 7,1/1,6 Sh 70	1
9		04D1100600	Front nozzle	1
10		04N2103702400150	O - ring 24/1,5 Sh 70	1
A70		04S1107700	Hydraulic body complete	1
16		04D1100800	Hanger	1
A71		04S1100900	Hydraulic piston complete	1
	21	04N2104001200250	O - ring 12/2,5	1
	22	04D1106200	Guiding band	1
	23	04D1106600	Pneumatic seal 32x25x4,5	1
24		04N2103703800200	O - ring 38/2 Sh 70	1
25		04D1101000	Rear screwing	1
26		04D1101101	Ring	1
27		04N3600000000001	Steel ball 4,762	1
28		04N3600000000002	Steel ball 8	1
A72		04S1101200	Bush complete	1
30		04N1000738000408	Screw M4x8 imbus	2
31		04D1101300	Covering	1
32		04S1201402	Mandrel container	1
34		04D1101500	Small pin	1
35		04D1101600	Spring	2
A73		04S1107801	Insert PP complete	1
	39	04N2103901500150	O - ring 15/1,5 Sh 90	1
	40	04S1101801	Insert PP	1
	41	04N2104001800220	O - ring 18/2,2	1
A39		04S1101900	Valve piston complete	1
A40		04S1102000	Valve body complete	1
46		04N2406696500090	Plastic ball 9	1
A41		04S1102100	Valve bottom	1
49		04N1000798408200	Screw M8x20 DIN 7984	2
A75		04S1102302	Air supply ring complete	1
	51	04N2103706000200	O - ring 60/2 Sh 70	1
	52	04N2103706300200	O - ring 63/2 Sh 70	1
	53	04D1102302	Air supply ring - red	1
67		04S1103200	Aircoupling	1
	A43	04S1103210	Body of aircoupling complete	1
	A44	04S1103220	Rotary part of aircoupl. compl.	1

QONNECT
EUROPEAN RIVET ASSOCIATION

Item code: 03AS1



	6705	04N1400471000010	Retaining ring 10	1
54		04D1102403	Body bottom	1
59		04D1102701	Hydropneumatic piston	1
60		04N2103900400150	O - ring 4/1,5 Sh 90	1
61		04N1000091204080	Screw M4x8 DIN 912	1
A74		04S1102801	Pneumatic piston complete	1
	62	04D1102801	Pneumatic piston	1
	63	04N2300007140000	Pneumatic seal 14	1
	64	04D1106400	Pneumatic seal 70x60x4,5	1
65		04D1103001	Pneumatic cylinder	1
66		04D1103100	Tube	1
68		04N2103700700200	O - ring 7/2 Sh 70	1
69		04N2103700400150	O - ring 4/1,5 Sh 70	1
A46		04S1103300	Trigger body complete	1
73		04D1103400	Trigger piston	1
74		04D1103505	Trigger - red	1
76		04D1103800	Pin	1
77		04D1103900	Wheel	2
78		04N1500000010004	Compression spring	1
79		04D1103600	Nut of body	1
80		04D1103700	Soft sleeve	1
81		04N2103703600200	O - ring 36/2 Sh 70	1

QONNECT EUROPEAN RIVET ASSOCIATION

QONNECT
EUROPEAN RIVET ASSOCIATION

Item code: 03AS1



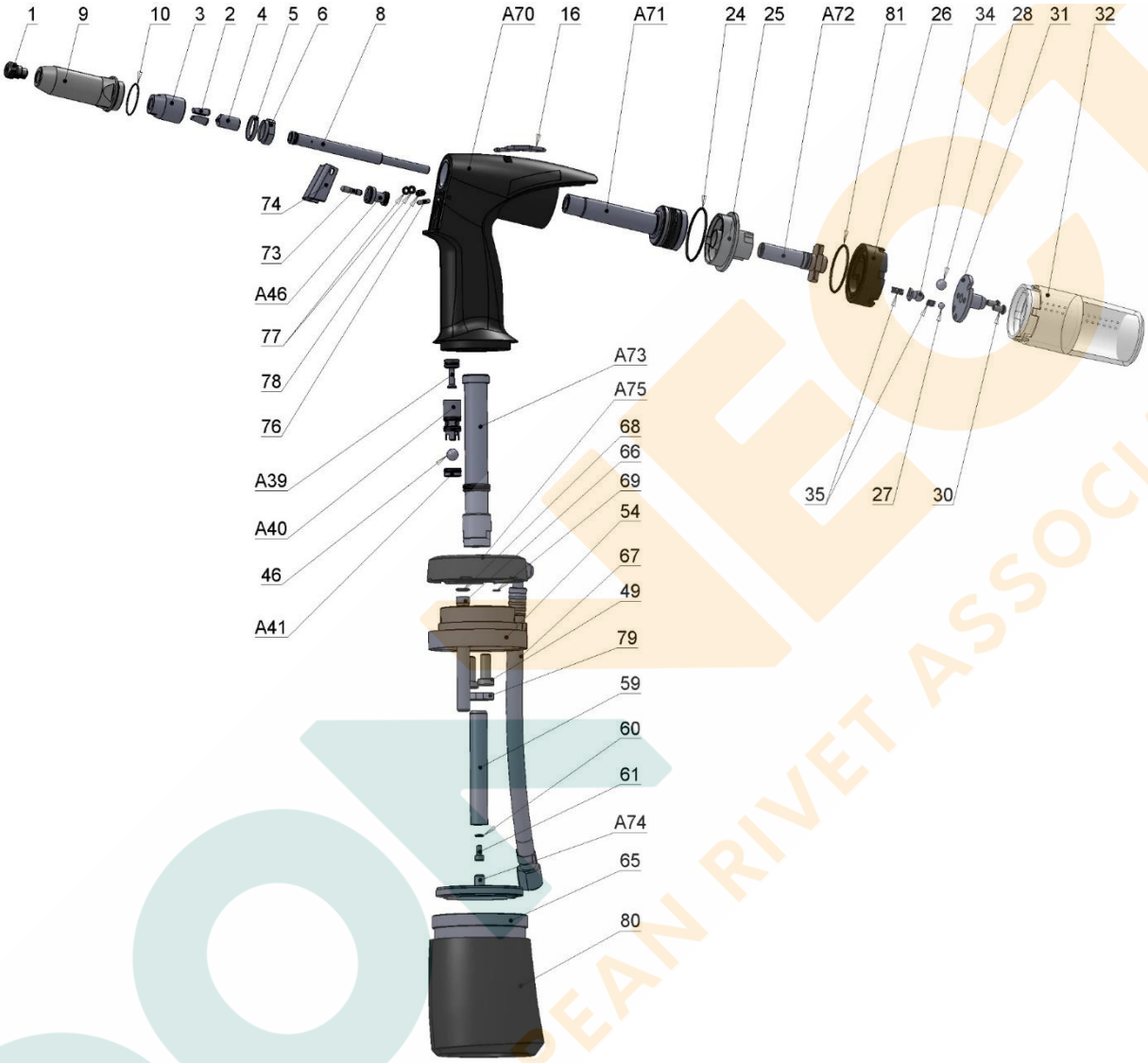

QONNECT EUROPEAN RIVET ASSOCIATION